PETERSBURG BOROUGH
SOUTH HARBOR LAUNCH RAMP
FISH CLEANING FLOAT
MARCH 2014

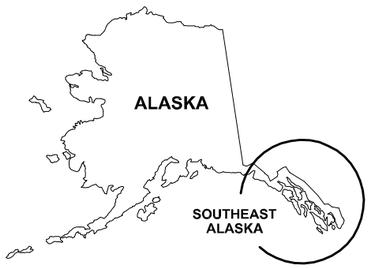

LOCATION MAP

SOUTHEAST ALASKA

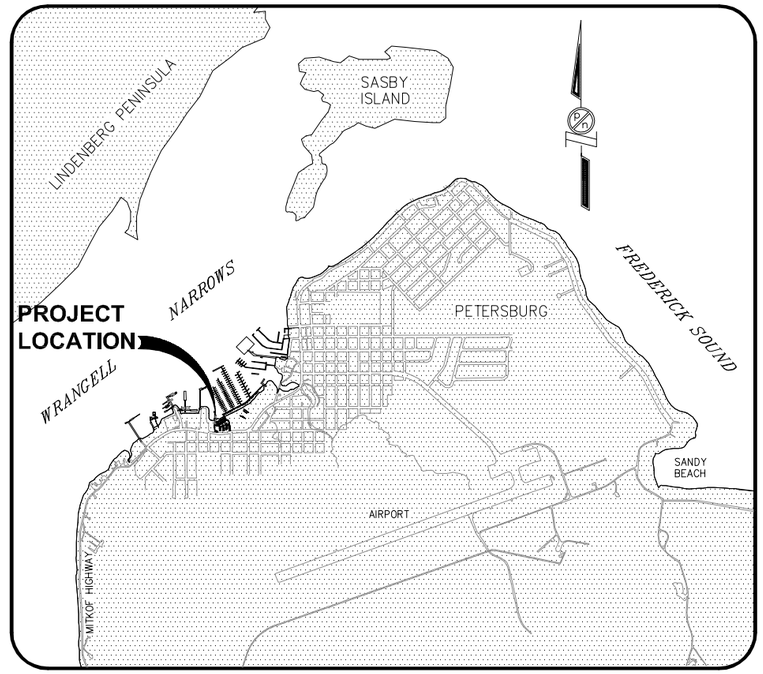

SITE PLAN

PND ENGINEERS, INC. (PND) IS NOT RESPONSIBLE FOR SAFETY PROGRAMS, METHODS OR PROCEDURES OF OPERATION, OR THE CONSTRUCTION OF THE DESIGN SHOWN ON THESE DRAWINGS. DRAWINGS ARE FOR THE USE OF THIS PROJECT ONLY AND ARE NOT INTENDED FOR REUSE WITHOUT WRITTEN APPROVAL FROM PND. DRAWINGS ARE ALSO NOT TO BE USED IN ANY MANNER THAT WOULD CONSTITUTE A DETRIMENT DIRECTLY OR INDIRECTLY TO PND.

PROJECT SCHEDULE

DESCRIPTION	SCHEDULE
SUBSTANTIAL COMPLETION	SEPTEMBER 15, 2014
FINAL COMPLETION OF ALL WORK UNDER THIS CONTRACT	SEPTEMBER 30, 2014

DRAWING INDEX

SHEET NO.	DWG. NO.	TITLE
		GENERAL
1 OF 11	1.01	TITLE SHEET, VICINITY MAP AND DRAWING INDEX
2 OF 11	1.02	EXISTING CONDITIONS AND DEMOLITION PLAN
		FLOAT
3 OF 11	3.01	FLOAT DECK PLAN
4 OF 11	3.02	FLOAT FRAMING PLAN
5 OF 11	3.03	FLOAT MODULES
6 OF 11	3.04	FLOAT SECTIONS
7 OF 11	3.05	DIAPHRAGM DETAILS
8 OF 11	3.06	MISCELLANEOUS FLOAT DETAILS
9 OF 11	3.07	MISCELLANEOUS FLOAT DETAILS
10 OF 11	3.08	BALLAST TANK AND FLOATATION BILLET DETAILS
11 OF 11	3.09	EXISTING TRANSITION PLATE ASSEMBLY

PORT AND HARBOR
PETERSBURG
ALASKA

REVISIONS

REV.	DATE	DESCRIPTION	DWN.	CKD.	APP.

PND ENGINEERS, INC.
9360 Glacier Highway Ste 100
Juneau, Alaska 99801
Phone: 907-586-2093
Fax: 907-586-2099
www.pndengineers.com

DESIGN: JLD CHECKED: CRS
DRAWN: JLD APPROVED: CRS
SCALE: AS SHOWN

STATE OF ALASKA
John L. DeMuth
CE-8847
REGISTERED PROFESSIONAL ENGINEER
DATE: 3/28/14

PETERSBURG, ALASKA
SOUTH HARBOR LAUNCH RAMP
FISH CLEANING FLOAT

SHEET TITLE:
TITLE SHEET, VICINITY MAP AND DRAWING INDEX

PND PROJECT NO.: 132082.00 DWG. FILE:

1.01
SHEET 1 OF 11

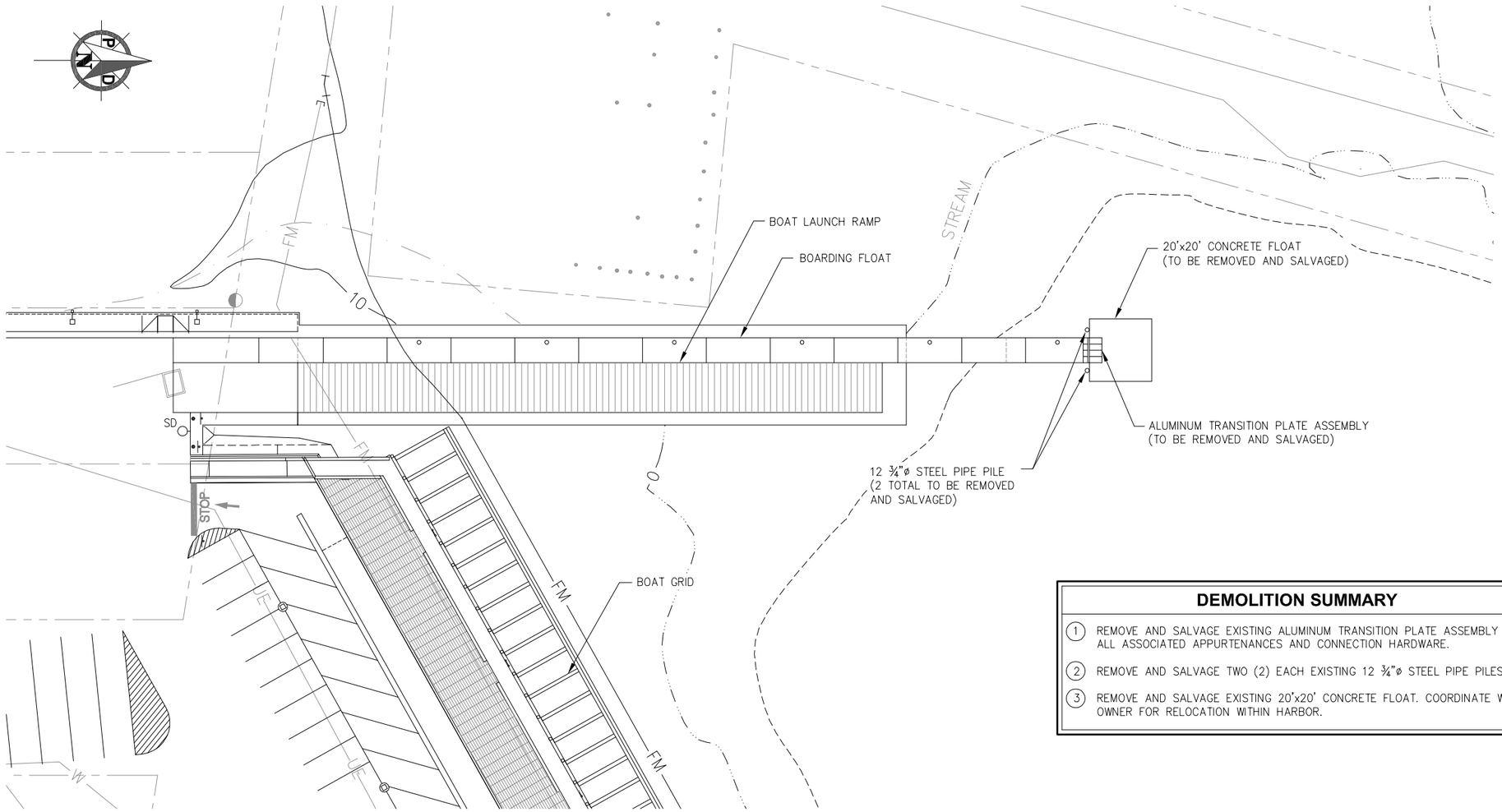

EXISTING CONDITIONS

SCALE IN FEET

0 20 40

DEMOLITION SUMMARY

1. REMOVE AND SALVAGE EXISTING ALUMINUM TRANSITION PLATE ASSEMBLY AND ALL ASSOCIATED APPURTENANCES AND CONNECTION HARDWARE.
2. REMOVE AND SALVAGE TWO (2) EACH EXISTING 12 ¾"ø STEEL PIPE PILES.
3. REMOVE AND SALVAGE EXISTING 20'x20' CONCRETE FLOAT. COORDINATE WITH OWNER FOR RELOCATION WITHIN HARBOR.

PORT AND HARBOR
PETERSBURG
ALASKA

REVISIONS

REV.	DATE	DESCRIPTION	DWN.	CKD.	APP.

PND ENGINEERS, INC.
9360 Glacier Highway Ste 100
Juneau, Alaska 99801
Phone: 907-586-2093
Fax: 907-586-2099
www.pndengineers.com

DESIGN: JLD CHECKED: CRS
DRAWN: JLD APPROVED: CRS
SCALE:

STATE OF ALASKA
Jon L. DeMuth
CE-8847
REGISTERED PROFESSIONAL ENGINEER
DATE: 3/28/14

PETERSBURG, ALASKA
SOUTH HARBOR LAUNCH RAMP
FISH CLEANING FLOAT

SHEET TITLE:
EXISTING CONDITIONS
AND DEMOLITION PLAN

PND PROJECT NO.: 132082.00 DWG. FILE:

1.02
SHEET 2 OF 11

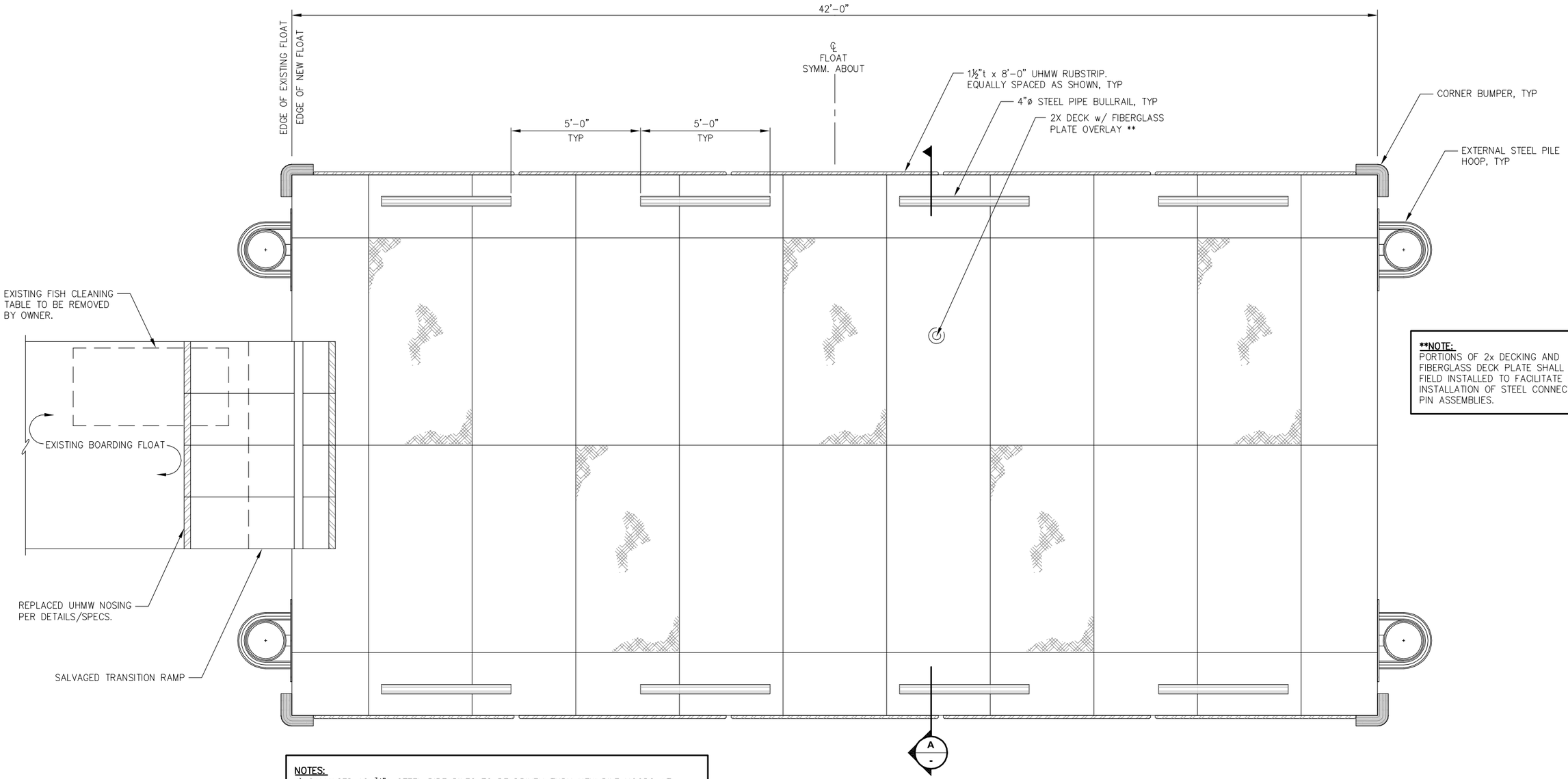

NOTE:
PORTIONS OF 2x DECKING AND FIBERGLASS DECK PLATE SHALL BE FIELD INSTALLED TO FACILITATE FIELD INSTALLATION OF STEEL CONNECTION PIN ASSEMBLIES.

NOTES:
1) SALVAGED 12 ¾"ø STEEL PIPE PILES TO BE DRIVEN THRU NEW PILE HOOPS AT SHOREWARD END OF NEW FLOAT.
2) INSTALL NEW 12 ¾"ø x 0.500"t STEEL PIPE PILES AT SEAWARD END OF NEW FLOAT.
3) ALIGN CENTER OF NEW FLOAT w/ CENTER OF EXISTING BOARDING FLOAT AS SHOWN.

FLOAT DECK- PLAN

PORT AND HARBOR
PETERSBURG
ALASKA

REVISIONS

REV.	DATE	DESCRIPTION	DWN.	CKD.	APP.

P N D ENGINEERS, INC.
9360 Glacier Highway Ste 100
Juneau, Alaska 99801
Phone: 907-586-2093
Fax: 907-586-2099
www.pndengineers.com

DESIGN: MS CHECKED: CRS
DRAWN: WRB APPROVED: CRS
SCALE:

STATE OF ALASKA
Chris L. DeMuth
CE-8847
REGISTERED PROFESSIONAL ENGINEER
DATE: 3/28/14

PETERSBURG, ALASKA
SOUTH HARBOR LAUNCH RAMP
FISH CLEANING FLOAT

SHEET TITLE: FLOAT DECK PLAN

PND PROJECT NO.: 132082.00 DWG. FILE:

3.01
SHEET 3 OF 11

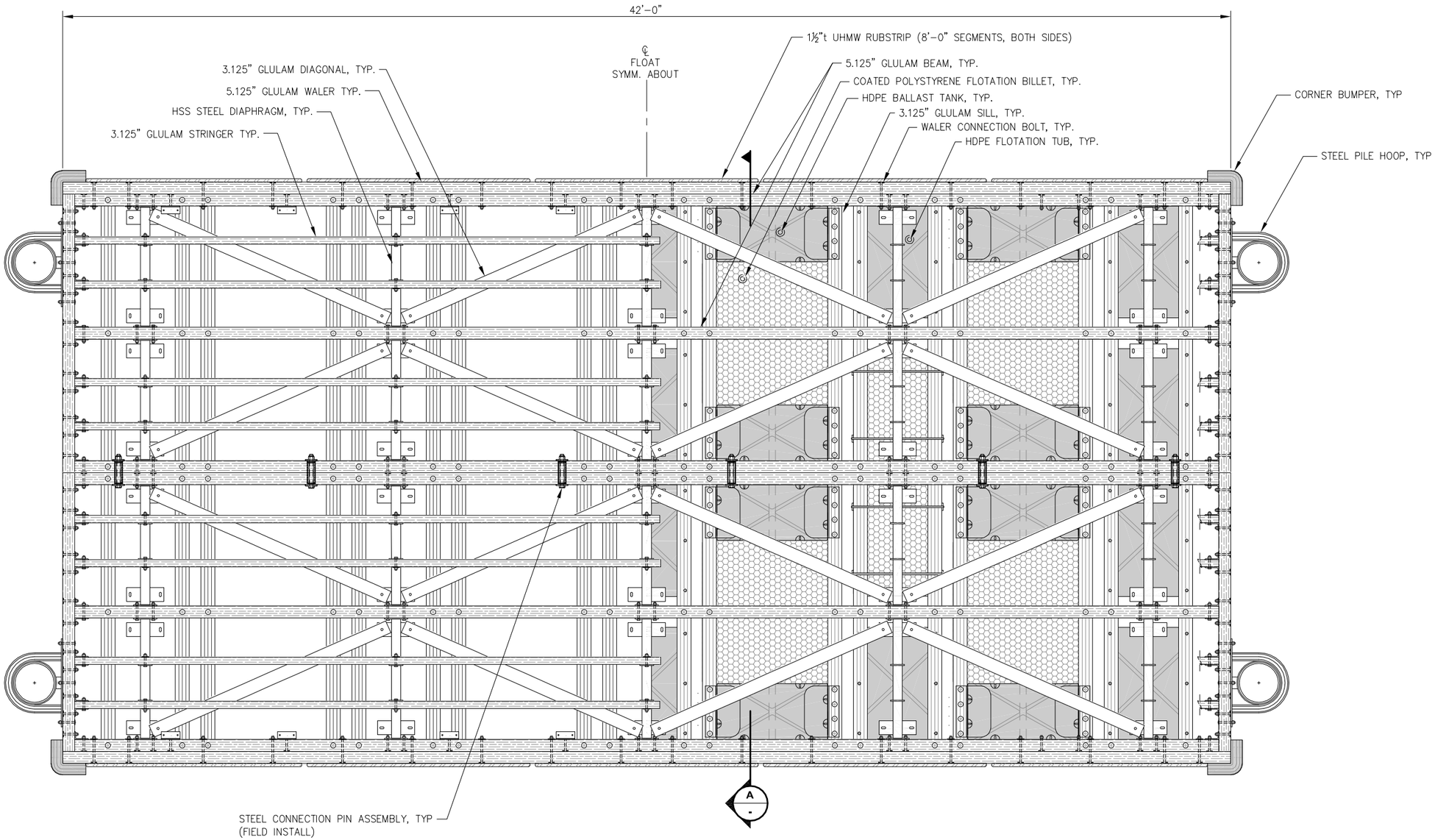

FLOAT FRAMING- PLAN

PORT AND HARBOR
PETERSBURG
ALASKA

REVISIONS

REV.	DATE	DESCRIPTION	DWN.	CKD.	APP.

P N D ENGINEERS, INC.
9360 Glacier Highway Ste 100
Juneau, Alaska 99801
Phone: 907-586-2093
Fax: 907-586-2099
www.pndengineers.com

DESIGN: JLD CHECKED: CRS
DRAWN: JLD APPROVED: CRS
SCALE:

STATE OF ALASKA
Jon L. DeMuth
CE-8847
REGISTERED PROFESSIONAL ENGINEER
DATE: 3/28/14

PETERSBURG, ALASKA
SOUTH HARBOR LAUNCH RAMP
FISH CLEANING FLOAT

SHEET TITLE:
FLOAT FRAMING PLAN

PND PROJECT NO.: 132082.00 DWG. FILE:

3.02
SHEET 4 OF 11

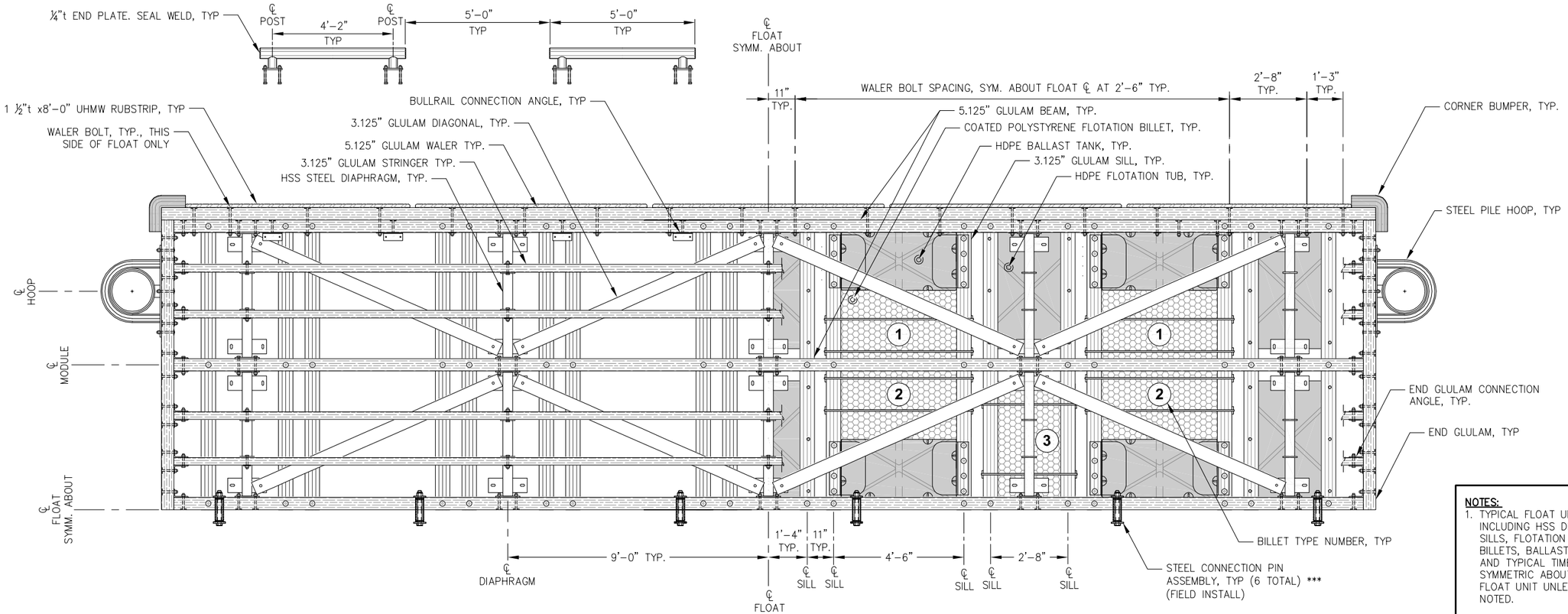

NOTES:

1. TYPICAL FLOAT UNIT COMPONENTS INCLUDING HSS DIAPHRAGMS, GLULAM SILLS, FLOTATION TUBS, FLOTATION BILLETS, BALLAST TANKS, DIAGONALS AND TYPICAL TIMBER FRAMING ARE SYMMETRIC ABOUT CENTERLINE OF FLOAT UNIT UNLESS OTHERWISE NOTED.

*** ADJOINING EXTERIOR GLULAM BEAMS FOR FLOAT UNITS SHALL BE MATCH-DRILLED TO ASSURE ALIGNMENT OF CONNECTION PIN HOLES.

FLOAT MODULE - PLAN

NOTE: PROVIDE (1) FLOAT MODULE AS SHOWN AND (1) FLOAT MODULE OPPOSITE HAND.

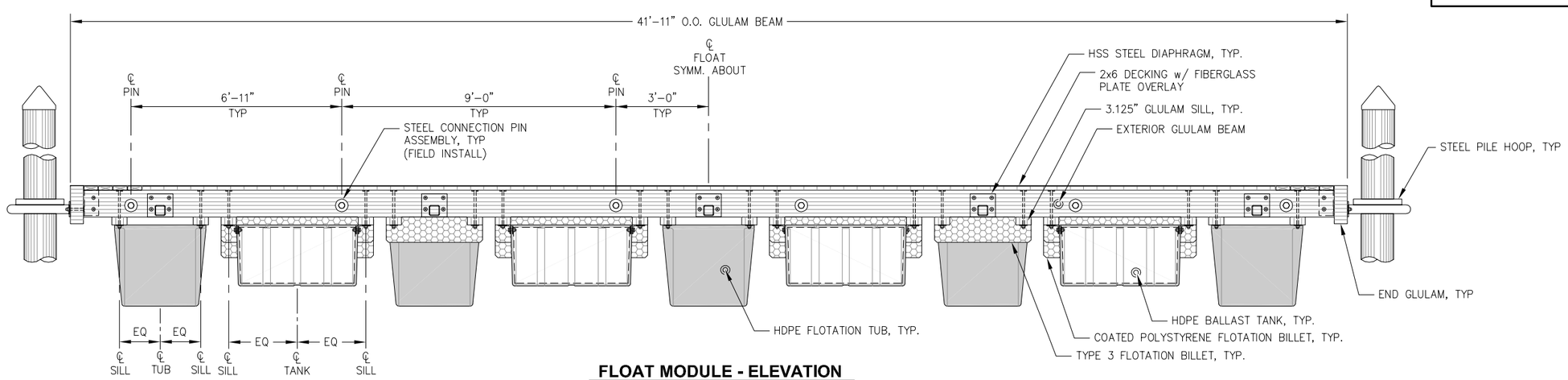

FLOAT MODULE - ELEVATION

PORT AND HARBOR
PETERSBURG
ALASKA

REVISIONS

REV.	DATE	DESCRIPTION	DWN.	CKD.	APP.

P N D ENGINEERS, INC.
9360 Glacier Highway Ste 100
Juneau, Alaska 99801
Phone: 907-586-2093
Fax: 907-586-2099
www.pndengineers.com

DESIGN: JLD CHECKED: CRS
DRAWN: JLD APPROVED: CRS
SCALE:

STATE OF ALASKA — Jon L. DeMuth — CE-8847 — REGISTERED PROFESSIONAL ENGINEER
DATE: 3/28/14

PETERSBURG, ALASKA
SOUTH HARBOR LAUNCH RAMP
FISH CLEANING FLOAT

SHEET TITLE: **FLOAT MODULES**

PND PROJECT NO.: 132082.00 DWG. FILE:

3.03
SHEET 5 OF 11

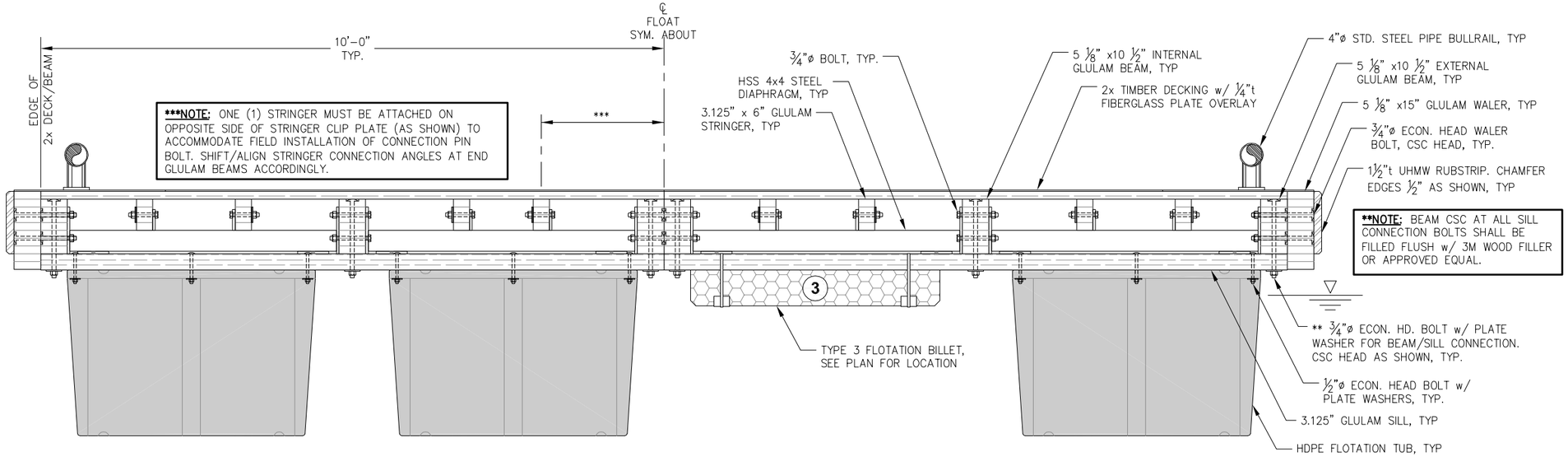

A - TYPICAL FLOAT SECTION AT FLOATATION TUBS

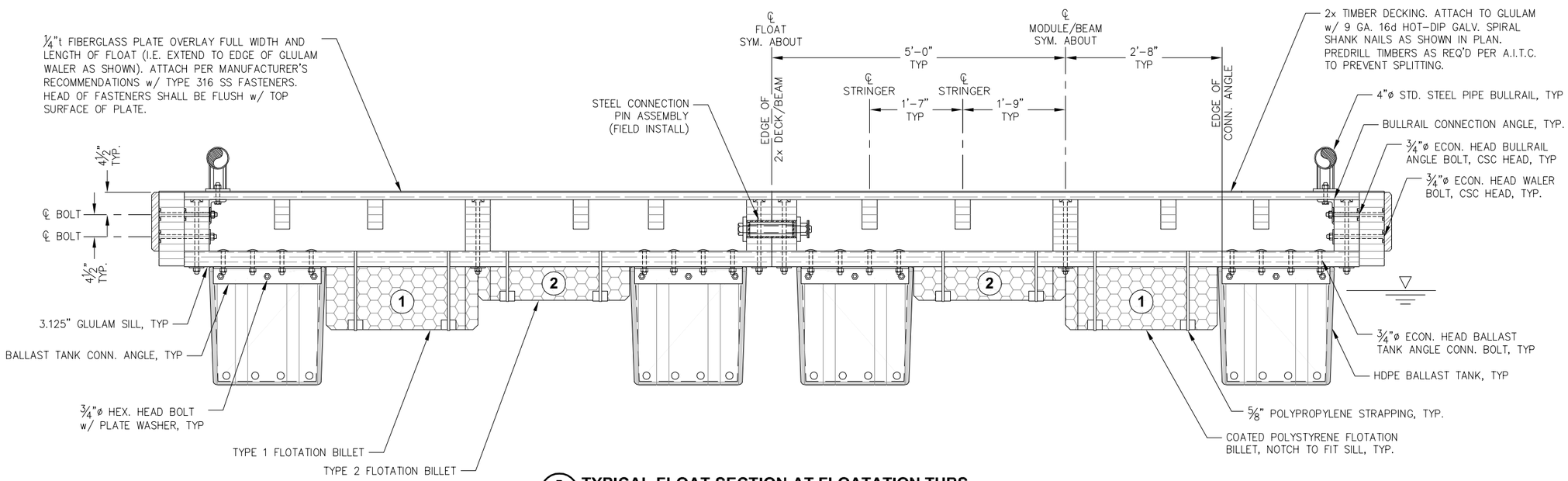

B - TYPICAL FLOAT SECTION AT FLOATATION TUBS

PORT AND HARBOR
PETERSBURG
ALASKA

REVISIONS

REV.	DATE	DESCRIPTION	DWN.	CKD.	APP.

PND ENGINEERS, INC.
9360 Glacier Highway Ste 100
Juneau, Alaska 99801
Phone: 907-586-2093
Fax: 907-586-2099
www.pndengineers.com

DESIGN: JLD CHECKED: CRS
DRAWN: JLD APPROVED: CRS
SCALE:

STATE OF ALASKA — Jon L. DeMuth CE-8847 — REGISTERED PROFESSIONAL ENGINEER
DATE: 3/28/14

PETERSBURG, ALASKA
SOUTH HARBOR LAUNCH RAMP
FISH CLEANING FLOAT

SHEET TITLE: **FLOAT SECTIONS**

PND PROJECT NO.: 132082.00 DWG. FILE:

3.04
SHEET 6 OF 11

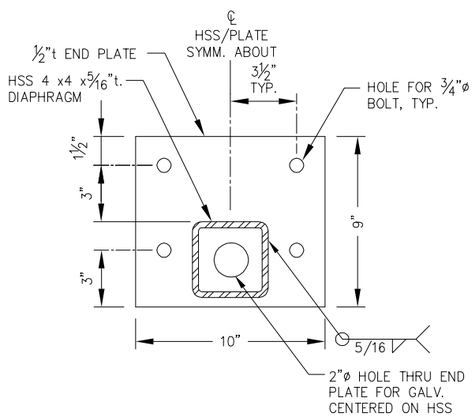

A - **DIAPHRAGM END PLATE**

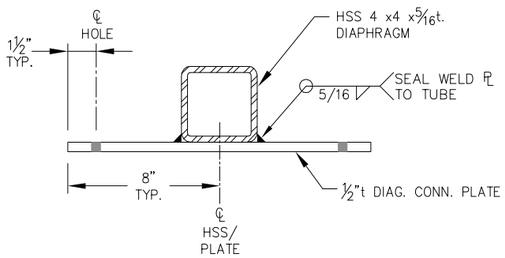

B - **DIAPHRAGM SECTION AT DIAG. CONN. PLATE**

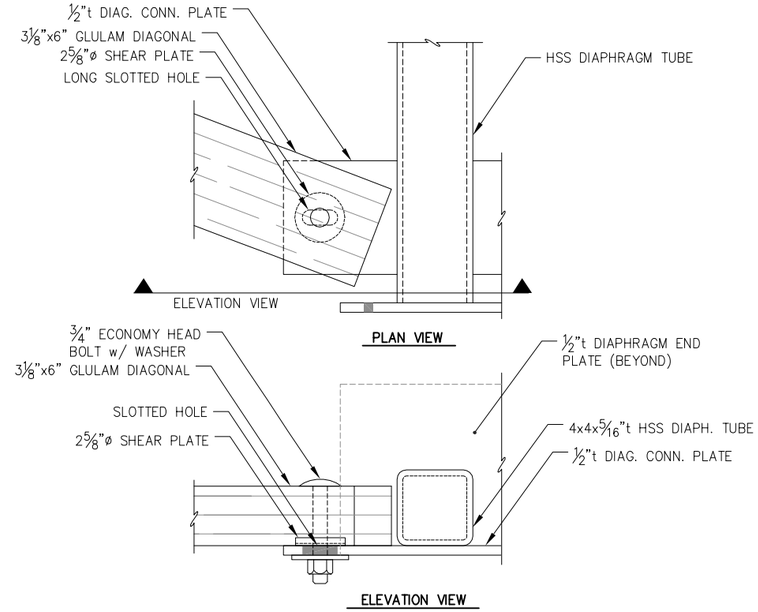

DIAPHRAGM - DIAGONAL BRACING CONNECTION DETAIL

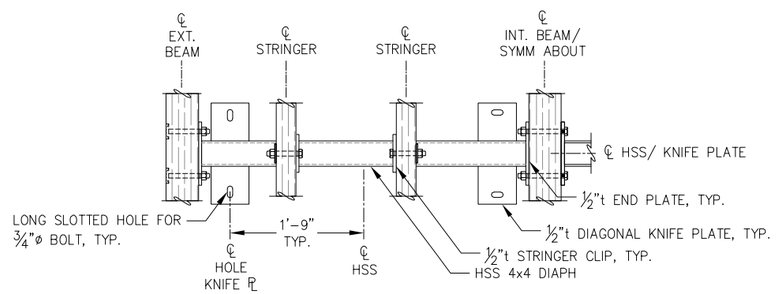

HSS DIAPHRAGM PLAN

NOTE:
ALL DIAPHRAGM WELDS TO BE 5/16" FILLET ALL AROUND UNLESS OTHERWISE NOTED.

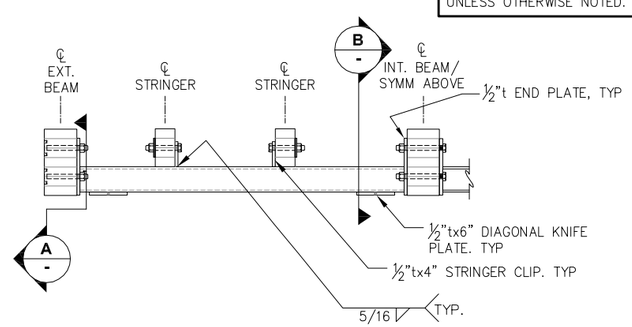

HSS DIAPHRAGM ELEVATION

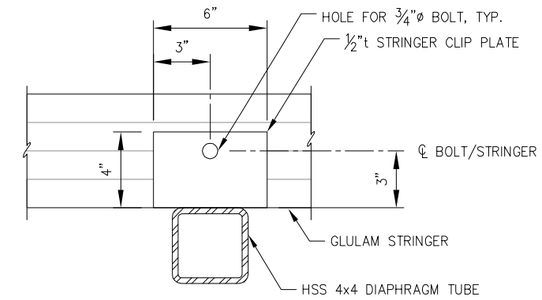

TYPICAL STRINGER CLIP PLATE

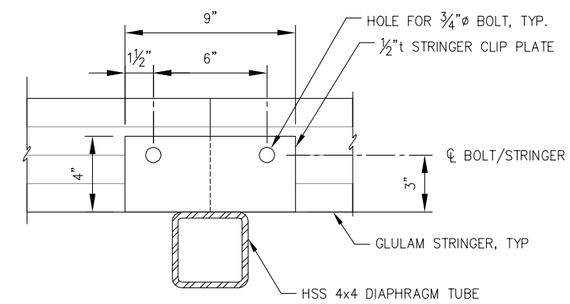

STRINGER PLATE AT SPLICE

NOTE: 3⅛"x6" GLULAM STRINGERS MAY ONLY BE SPLICED IN CASES WHERE DESIGN LENGTH PRECLUDES SAFE HANDLING. SPLICE LOCATIONS AND GLULAM LENGTH SHALL BE SUBMITTED FOR ENGINEER APPROVAL.

PORT AND HARBOR
PETERSBURG
ALASKA

REVISIONS

REV.	DATE	DESCRIPTION	DWN.	CKD.	APP.

P N D ENGINEERS, INC.
9360 Glacier Highway Ste 100
Juneau, Alaska 99801
Phone: 907-586-2093
Fax: 907-586-2099
www.pndengineers.com

DESIGN: MS CHECKED: CRS
DRAWN: MS/WRB APPROVED: CRS
SCALE:

STATE OF ALASKA — Scott L. DeMuth — CE-8847 — REGISTERED PROFESSIONAL ENGINEER
DATE: 3/28/14

PETERSBURG, ALASKA
SOUTH HARBOR LAUNCH RAMP
FISH CLEANING FLOAT

SHEET TITLE:
DIAPHRAGM DETAILS

PND PROJECT NO.: 132082.00 DWG. FILE:

3.05
SHEET 7 OF 11

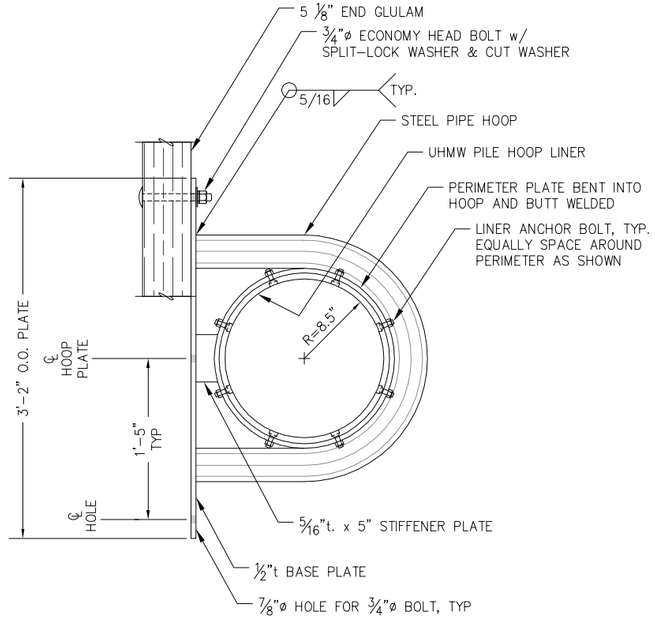

PILE HOOP - PLAN

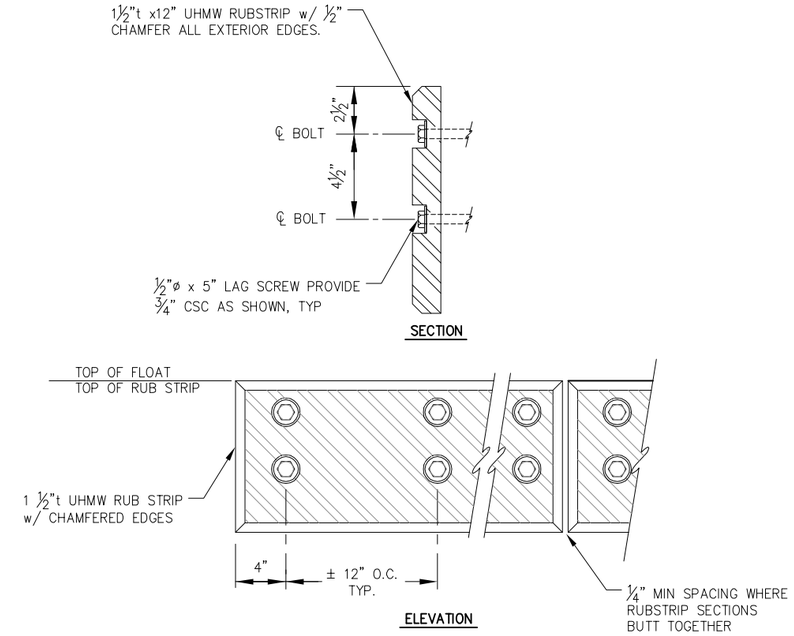

UHMW RUB STRIP

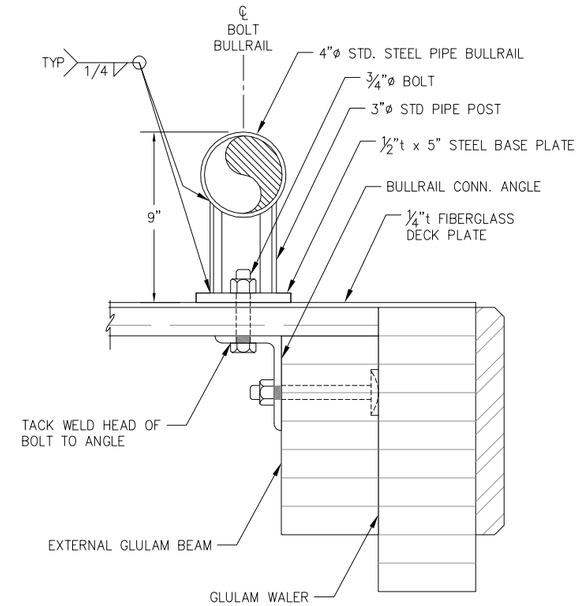

BULLRAIL - SECTION

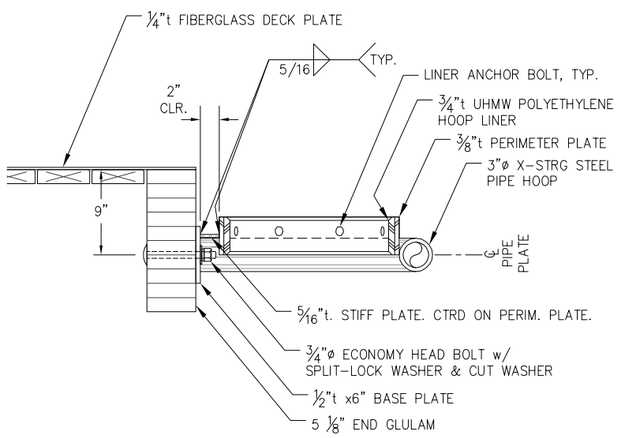

PILE HOOP - ELEVATION

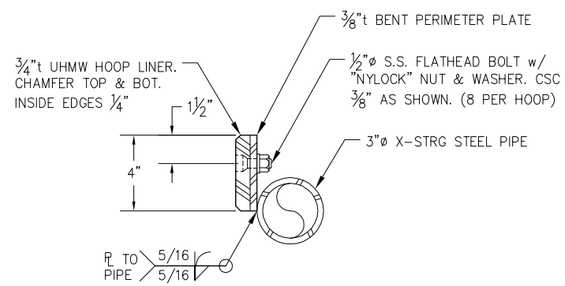

TYPICAL HOOP SECTION

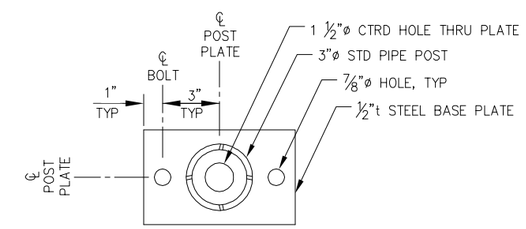

BULLRAIL BASE PLATE - PLAN

PORT AND HARBOR
PETERSBURG
ALASKA

REVISIONS

REV.	DATE	DESCRIPTION	DWN.	CKD.	APP.

P N D ENGINEERS, INC.
9360 Glacier Highway Ste 100
Juneau, Alaska 99801
Phone: 907-586-2093
Fax: 907-586-2099
www.pndengineers.com

DESIGN: MS CHECKED: CRS
DRAWN: MS/WRB APPROVED: CRS
SCALE:

STATE OF ALASKA — Jon L. DeMuth — CE-5847 — REGISTERED PROFESSIONAL ENGINEER
DATE: 3/28/14

PETERSBURG, ALASKA
SOUTH HARBOR LAUNCH RAMP
FISH CLEANING FLOAT

SHEET TITLE:
MISCELLANEOUS
FLOAT DETAILS

PND PROJECT NO.: 132082.00
DWG. FILE:

3.06
SHEET 8 OF 11

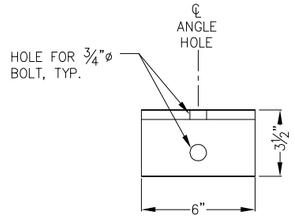

ELEVATION AT STRINGER

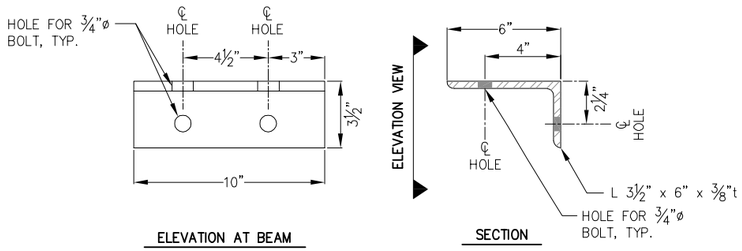

ELEVATION AT BEAM

SECTION

END GLULAM CONNECTION ANGLES

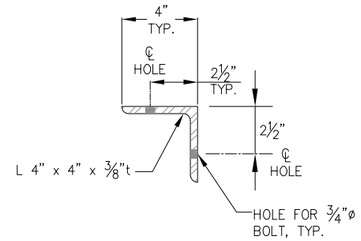

BALLAST TANK CONNECTION ANGLE

(LENGTH VARIES, SEE BALLAST TANK DETAILS)

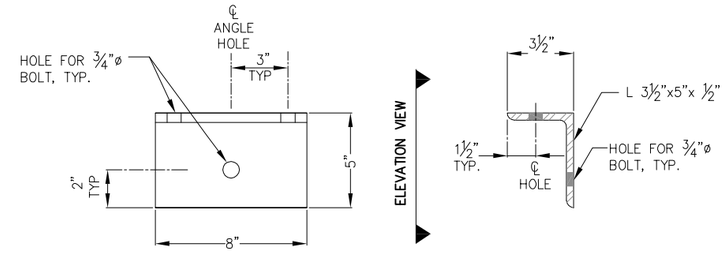

ELEVATION

SECTION

BULLRAIL CONNECTION ANGLE

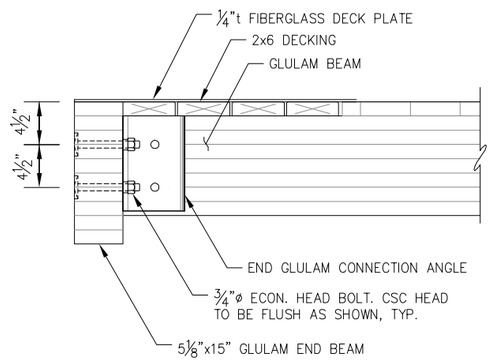

FLOAT END GLULAM SECTION

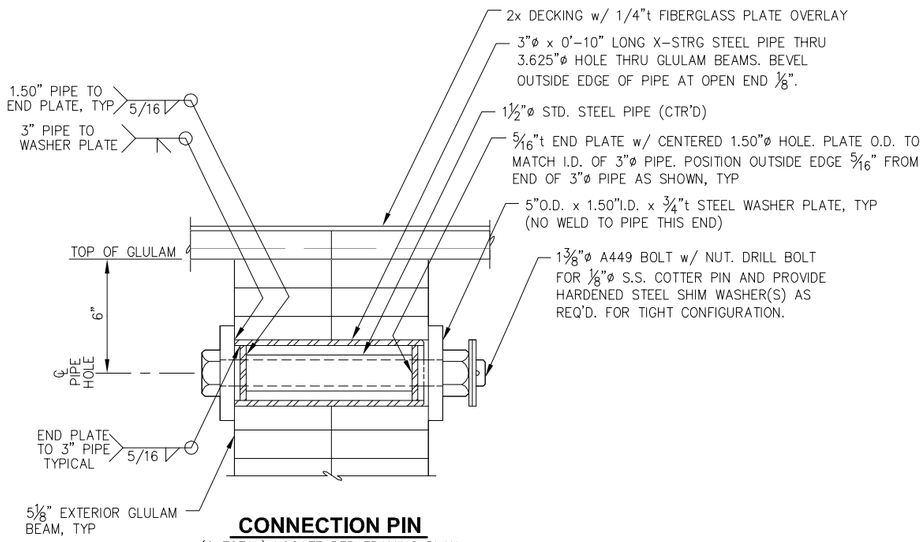

CONNECTION PIN

(6 TOTAL) LOCATE PER FRAMING PLAN

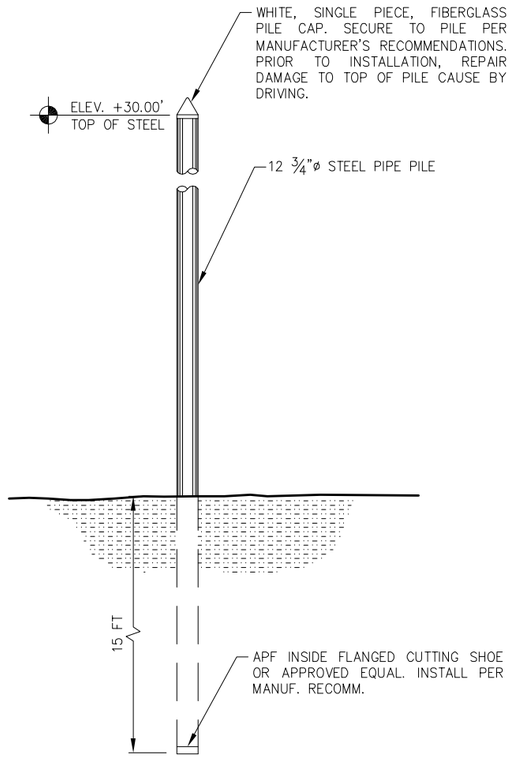

TYPICAL MOORING PILE

NOTES:
1) ALL PILES SHALL BE 12 ¾"øx 0.500"t STEEL PIPE; LENGTH 70 FT; GALVANIZED FULL LENGTH.
2) MINIMUM EMBEDMENT SHALL BE 15 FT.

PORT AND HARBOR
PETERSBURG
ALASKA

REVISIONS

REV.	DATE	DESCRIPTION	DWN.	CKD.	APP.

P N D ENGINEERS, INC.
9360 Glacier Highway Ste 100
Juneau, Alaska 99801
Phone: 907-586-2093
Fax: 907-586-2099
www.pndengineers.com

DESIGN: MS CHECKED: CRS
DRAWN: MS/WRB APPROVED: CRS
SCALE:

STATE OF ALASKA — Kevin L. DeMuth — CE-8847 — REGISTERED PROFESSIONAL ENGINEER
DATE: 3/28/14

PETERSBURG, ALASKA
SOUTH HARBOR LAUNCH RAMP
FISH CLEANING FLOAT

SHEET TITLE: MISCELLANEOUS FLOAT DETAILS

PND PROJECT NO.: 132082.00 DWG. FILE:

3.07
SHEET 9 OF 11

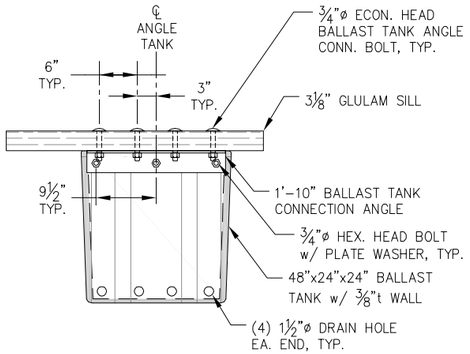

BALLAST TANK - SECTION

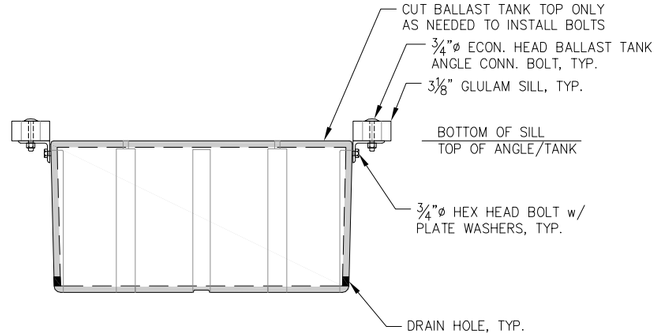

BALLAST TANK - ELEVATION

NOTE: BALLAST TANK CONFIGURATION ASSUMES THE USE OF "ACE" BRAND FLOAT DRUMS MANUFACTURED BY DEN HARTOG INDUSTRIES. IF ALTERNATE UNITS ARE PROPOSED, CONTRACTOR SHALL SUBMIT REVISED FLOATTION CONFIGURATION FOR ENGINEER APPROVAL.

NOTE: BALLAST TANK BOLT HOLES SHALL BE DRILLED USING A TEMPLATE OR THE CONNECTION ANGLE TO ENSURE ACCURATE FIT UP.

NOTE: SEE FLOTATION SCHEDULE FOR DEPTH AND LENGTH OF BILLETS.

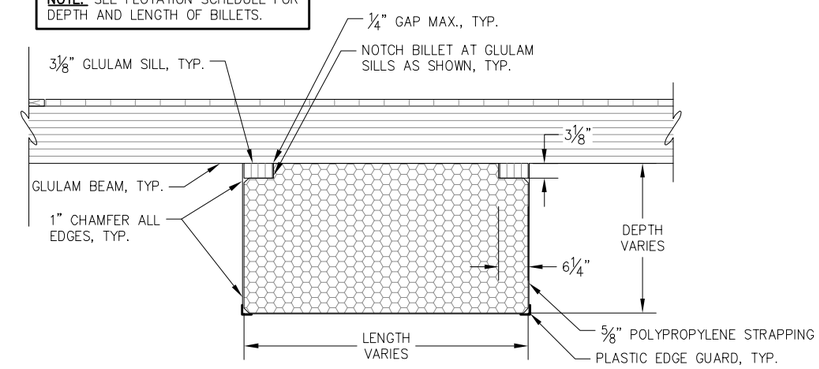

FLOTATION BILLET - SECTION

(ALL TYPES)

NOTE: STRAP SHOWN FOR ILLUSTRATION ONLY. STRAPS ARE TO LAY ATOP/ OVER GLULAM SILLS AS SHOWN IN TYPICAL FLOAT SECTIONS.

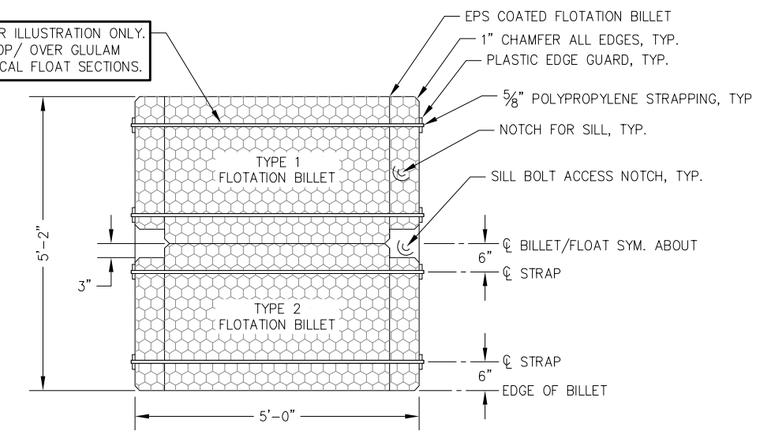

FLOTATION BILLET - PLAN

(TYPES 1 AND 2 SHOWN, TYPE 3 SIMILAR)

10x42 MODULE FLOTATION SCHEDULE

ITEM DESCRIPTION	LENGTH	WIDTH	HEIGHT	QUANTITY
TYPE 1 POLYSTYRENE BILLET	60"	31"	16"	4
TYPE 2 POLYSTYRENE BILLET	60"	31"	10"	4
TYPE 3 POLYSTYRENE BILLET	48"	38"	8"	2
HDPE FLOTATION TUB	48"	36"	32"	8
HDPE BALLAST TANK	48"	24"	24"	8

NOTE: THE FLOTATION SCHEDULE DEFINES THE FLOTATION AND BALLAST UNITS REQUIRED TO BUILD ONE (1) 10X42 FLOAT MODULE, TWO (2) MODULES ARE REQUIRED.

PORT AND HARBOR
PETERSBURG
ALASKA

REVISIONS

REV.	DATE	DESCRIPTION	DWN.	CKD.	APP.

P N D ENGINEERS, INC.
9360 Glacier Highway Ste 100
Juneau, Alaska 99801
Phone: 907-586-2093
Fax: 907-586-2099
www.pndengineers.com

DESIGN: MS CHECKED: CRS
DRAWN: WRB APPROVED: CRS
SCALE:

STATE OF ALASKA — John L. DeMuth — CE-8847 — REGISTERED PROFESSIONAL ENGINEER
DATE: 3/28/14

PETERSBURG, ALASKA
SOUTH HARBOR LAUNCH RAMP
FISH CLEANING FLOAT

SHEET TITLE:
BALLAST TANK AND FLOTATION BILLET DETAILS

PND PROJECT NO.: 132082.00 DWG. FILE:

3.08
SHEET 10 OF 11

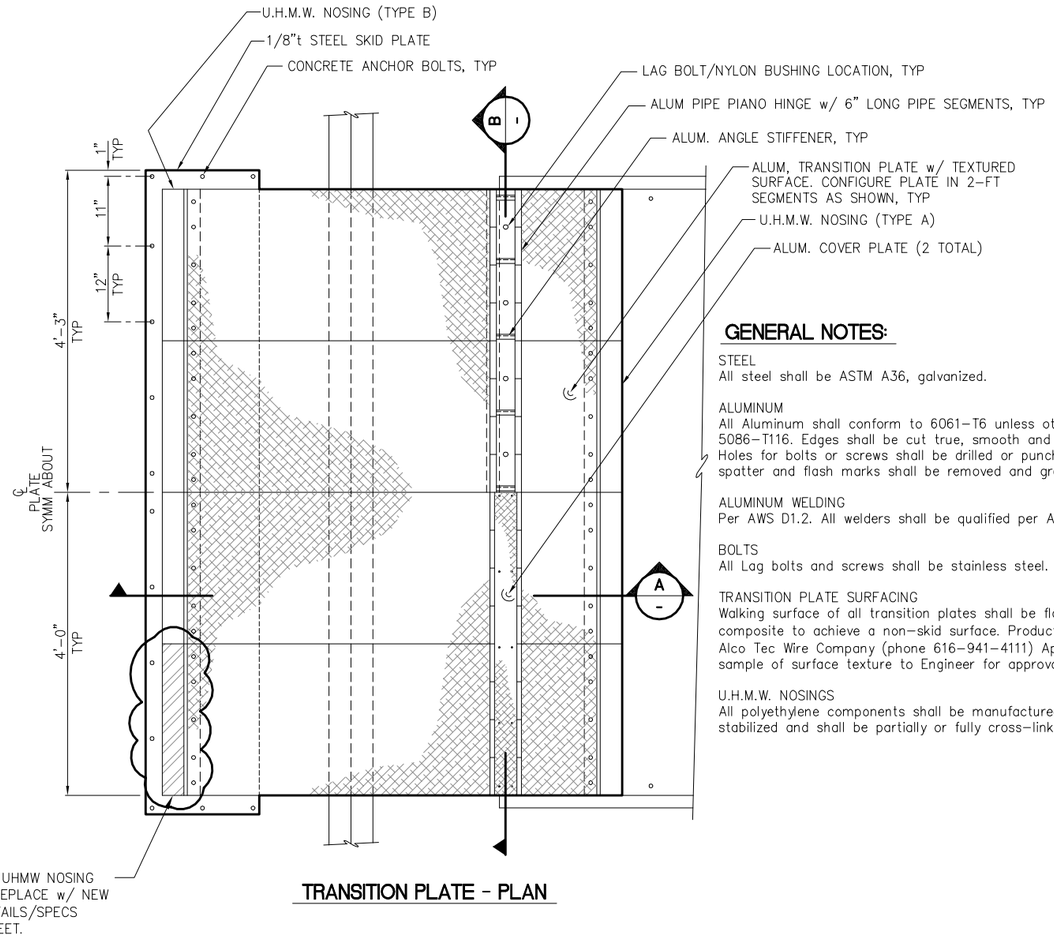

TRANSITION PLATE - PLAN

GENERAL NOTES:

STEEL
All steel shall be ASTM A36, galvanized.

ALUMINUM
All Aluminum shall conform to 6061-T6 unless otherwise noted. Aluminum plate shall conform to 5086-T116. Edges shall be cut true, smooth and free of burrs. Flame cutting will not be permitted. Holes for bolts or screws shall be drilled or punched. Corner edges shall be ground smooth. Weld spatter and flash marks shall be removed and ground smooth.

ALUMINUM WELDING
Per AWS D1.2. All welders shall be qualified per AWS for the type of welding anticipated.

BOLTS
All Lag bolts and screws shall be stainless steel.

TRANSITION PLATE SURFACING
Walking surface of all transition plates shall be flame sprayed or arc-sprayed with aluminum composite to achieve a non-skid surface. Product shall be Duralcan 90/10 as manufactured by Alco Tec Wire Company (phone 616-941-4111) Apply per manufacturers recommendations. Submit sample of surface texture to Engineer for approval.

U.H.M.W. NOSINGS
All polyethylene components shall be manufactured from virgin polyethylene material, be U.V. stabilized and shall be partially or fully cross-linked. Components shall be black in color.

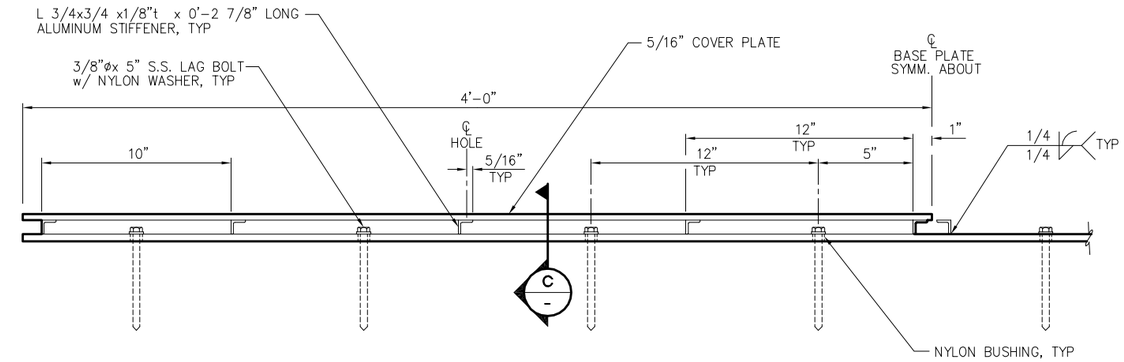

SECTION

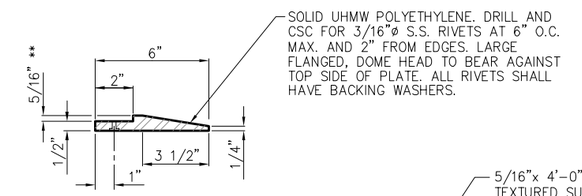

UHMW NOSING

(TYPE A SHOWN)
** 5/8" FOR TYPE B

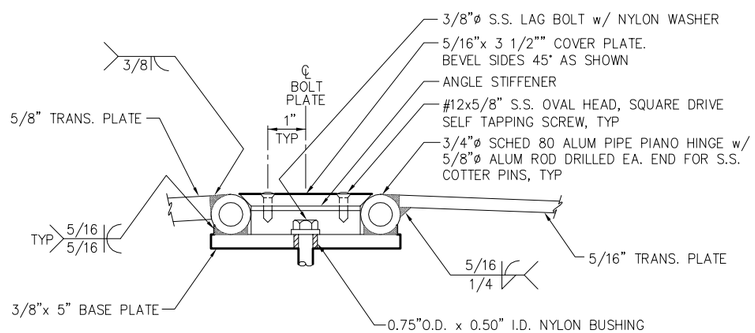

SECTION

NOTE: PIANO HINGE PIPE FLUSH w/ BASE PLATE EDGE AS SHOWN

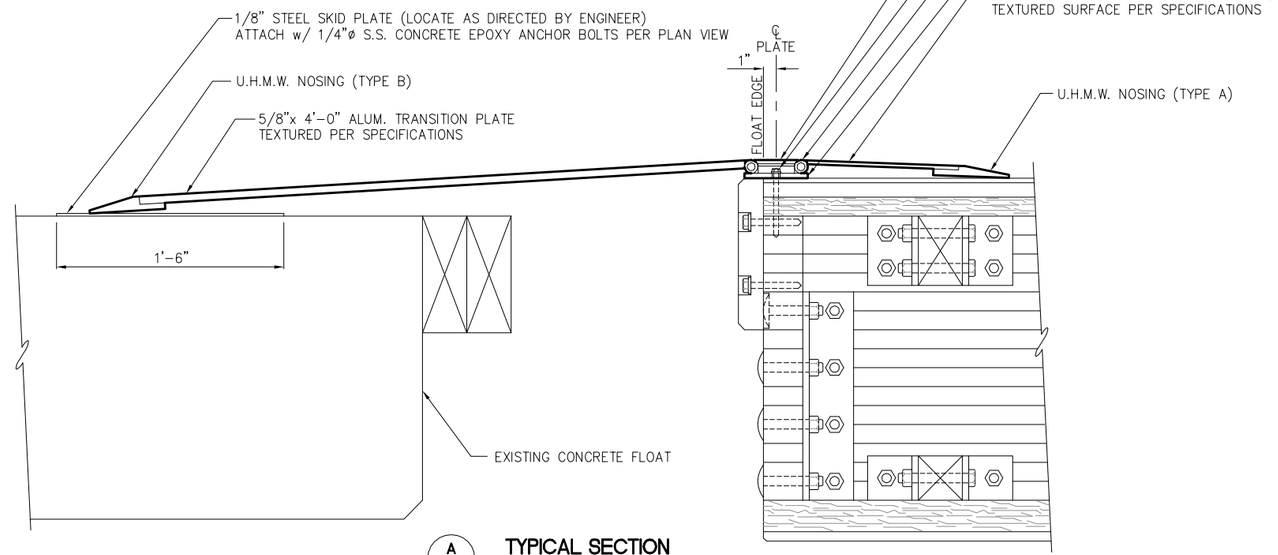

TYPICAL SECTION

PORT AND HARBOR
PETERSBURG
ALASKA

REVISIONS

REV.	DATE	DESCRIPTION	DWN.	CKD.	APP.

P N D ENGINEERS, INC.
9360 Glacier Highway Ste 100
Juneau, Alaska 99801
Phone: 907-586-2093
Fax: 907-586-2099
www.pndengineers.com

DESIGN: JLD CHECKED: CRS
DRAWN: JLD APPROVED: CRS
SCALE:

STATE OF ALASKA — Jon L. DeMuth — CE-8847 — REGISTERED PROFESSIONAL ENGINEER
DATE: 3/28/14

PETERSBURG, ALASKA
SOUTH HARBOR LAUNCH RAMP
FISH CLEANING FLOAT

SHEET TITLE:
EXISTING TRANSITION PLATE ASSEMBLY

PND PROJECT NO.: 132082.00 DWG. FILE:

3.09
SHEET 11 OF 11